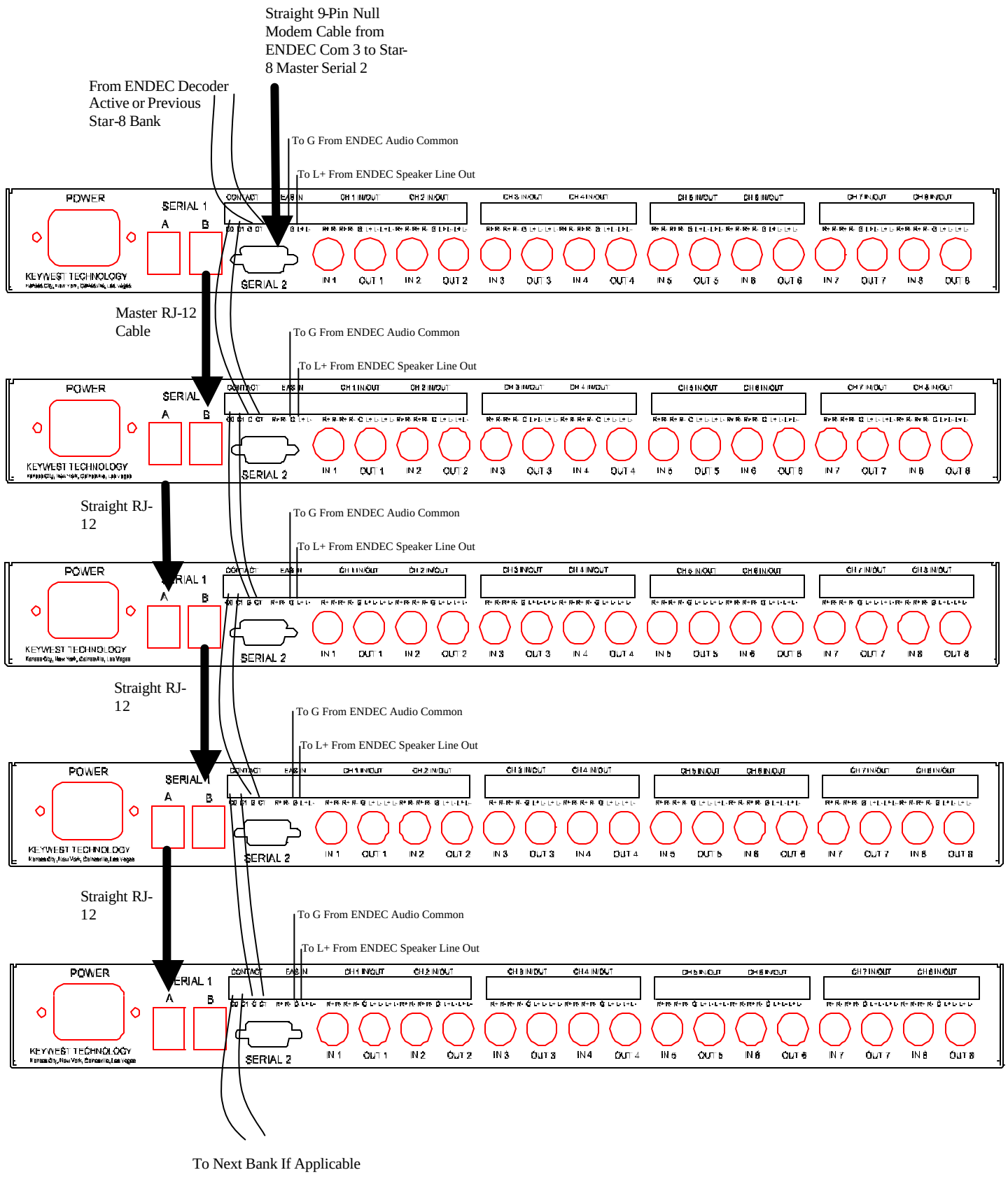
Straight 9-Pin Null Modem Cable from ENDEC Com 3 to Star-8 Master Serial 2
From ENDEC Decoder Active or Previous Star-8 Bank
To G From ENDEC Audio Common
To L+ From ENDEC Speaker Line Out
POWER
SERIAL 1
A
B
SERIAL 2
KEYWEST TECHNOLOGY
Master RJ-12 Cable
Straight RJ-12
Straight RJ-12
Straight RJ-12
To Next Bank If Applicable